Connecting BP6013G1 (5xxxx-06) system to 3-Phase
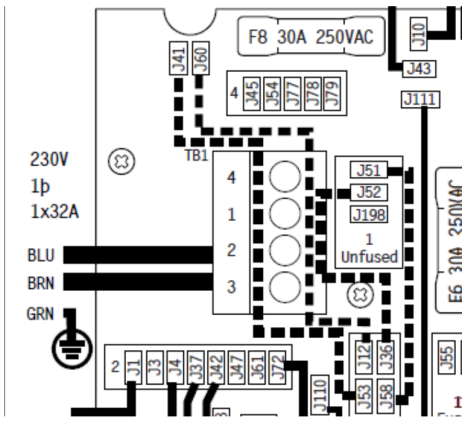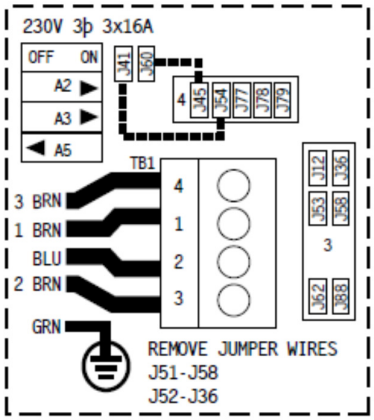
- Completely remove jumper connecting J51-J58
- Completely remove jumper connecting J52-J36
- Move Jumper from J12 to J45. The connection will be from J60 to J45
- Move Jumper from J53 to J54. The connection will be from J41 to J54
- Put dip switch A2and A3 in on/up, and A5 in off/down.